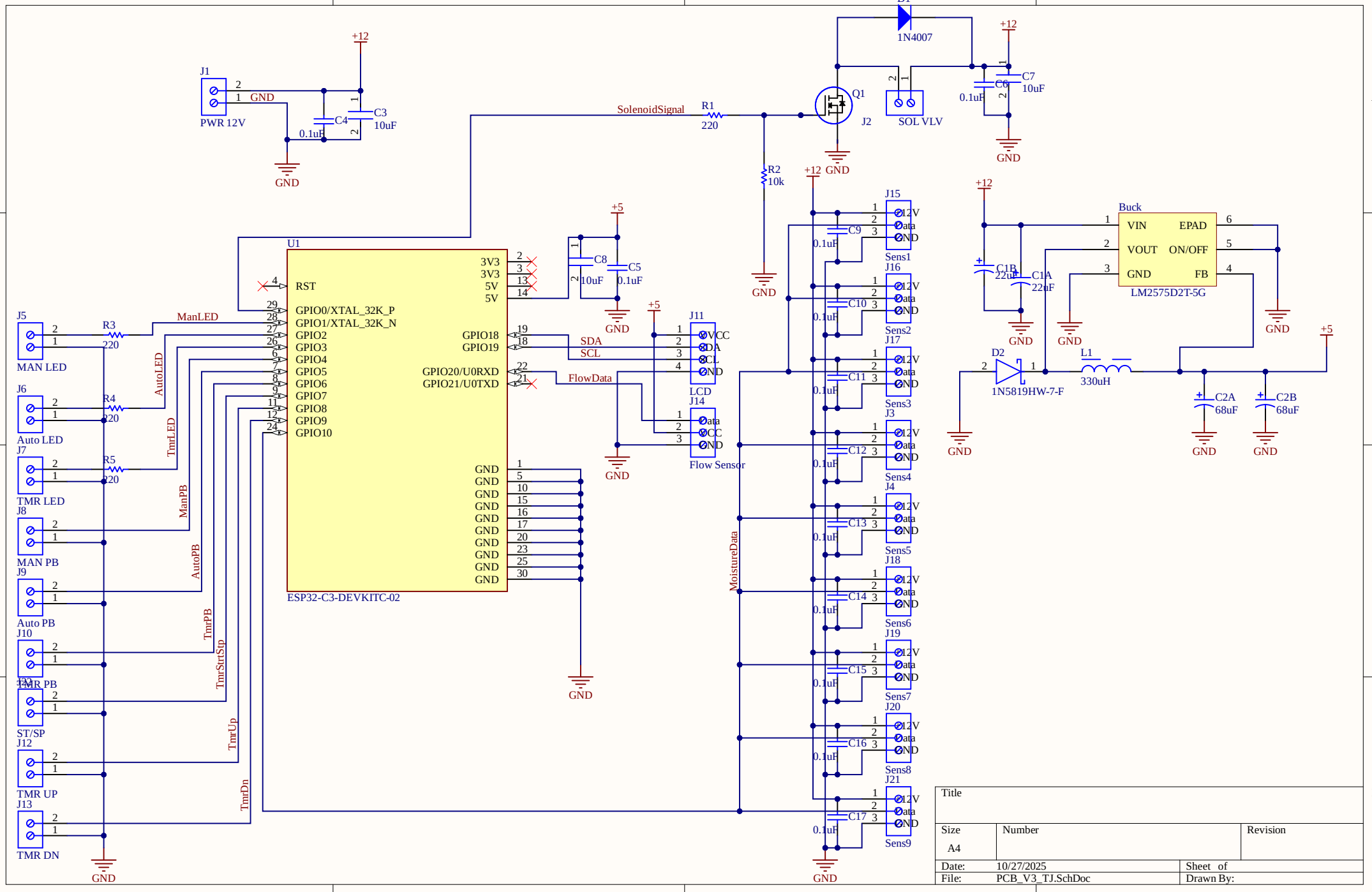
D1
1N4007
+12
J1
PWR 12V
GND
C3
10uF
C4
0.1uF
SolenoidSignal
R1
220
Q1
J2
SOL VLV
C6
0.1uF
C7
10uF
R2
10k
U1
ESP32-C3-DEVKITC-02
RST
GPIO0/XTAL_32K_P
GPIO1/XTAL_32K_N
GPIO2
GPIO3
GPIO4
GPIO5
GPIO6
GPIO7
GPIO8
GPIO9
GPIO10
3V3
5V
GPIO18
GPIO19
GPIO20/U0RXD
GPIO21/U0TXD
C8
10uF
C5
0.1uF
+5
J11
LCD
VCC
SDA
SCL
GND
SDA
SCL
FlowData
J14
Flow Sensor
J5
MAN LED
J6
Auto LED
J7
TMR LED
J8
MAN PB
J9
Auto PB
J10
TMR PB
J11
ST/SP
J12
TMR UP
J13
TMR DN
R3
R4
R5
220
ManLED
AutoLED
TmrLED
ManPB
AutoPB
TmrPB
TmrStrtStp
TmrUp
TmrDn
MoistureData
J15
J16
J17
J3
J4
J18
J19
J20
J21
Sens1
Sens2
Sens3
Sens4
Sens5
Sens6
Sens7
Sens8
Sens9
C9
C10
C11
C12
C13
C14
C15
C16
C17
0.1uF
Buck
LM2575D2T-5G
VIN
VOUT
GND
EPAD
ON/OFF
FB
C1B
22uF
C1A
22uF
D2
1N5819HW-7-F
L1
330uH
C2A
68uF
C2B
68uF
Title
Size
A4
Number
Revision
Date:
10/27/2025
Sheet of
File:
PCB_V3_TJ.SchDoc
Drawn By: